FILE: N:\Group Folders\Public\AutoCAD\AutoCAD 0-Drawings\Greenstreak\Speed Plate\GSK SP Plan View.dwg

PROJECT:_____

LOCATION:_____

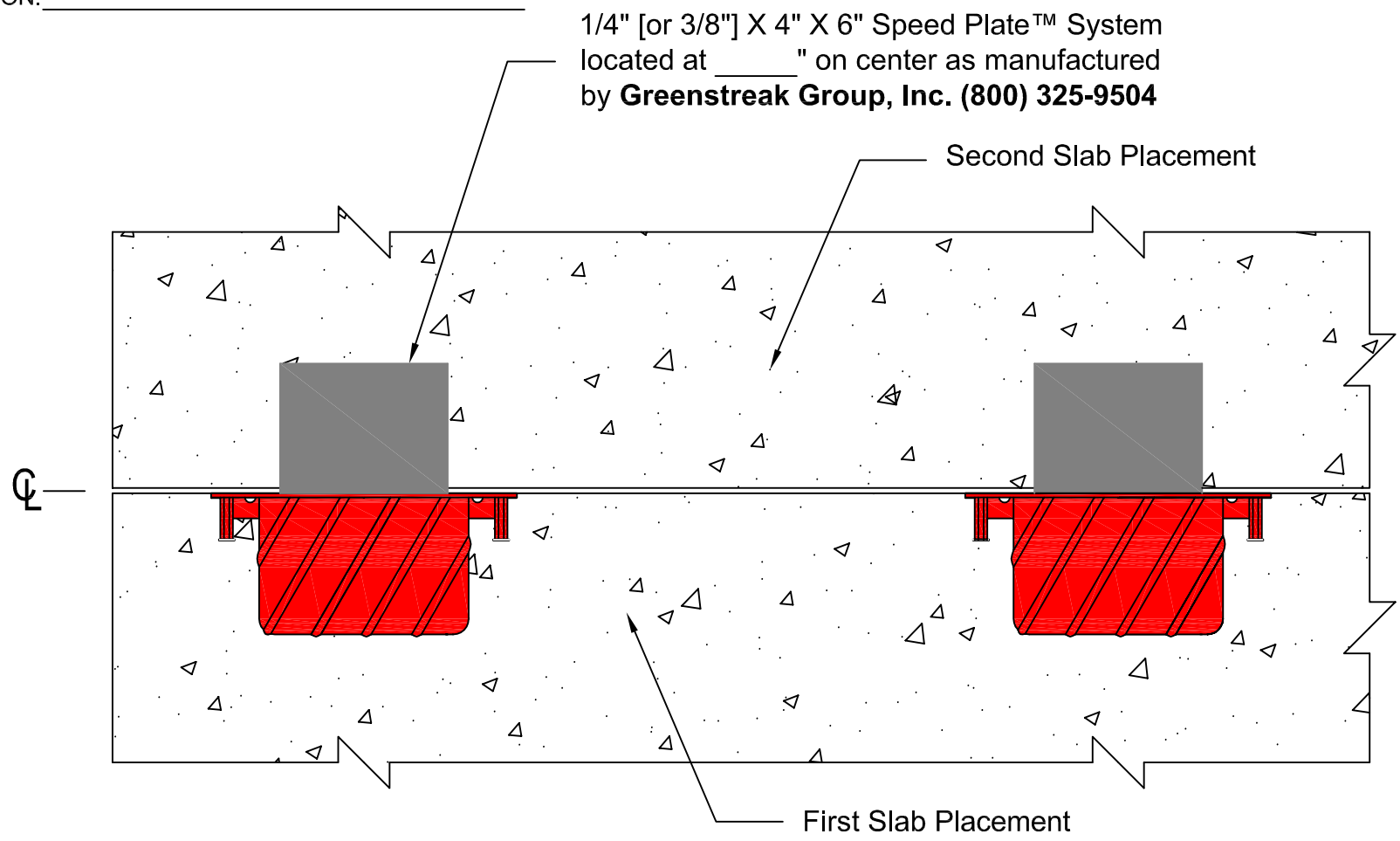

PLAN VIEW
SCALE: 3" = 1'

NOTES

1. Speed Plate™ assembly as manufactured by **Greenstreak Group, Inc. (800) 325-9504**.

REV. MARK	REVISION	BY	CHK	APP	DATE

DESIGNED:		
DRAWN:	CMD	8/1/06
CHECKED:		
APPROVED:		
FAB. REP.:		
SHEET NUMBER:		

DATE:	
PART NUMBER:	
QUANTITY REQUIRED:	
SCALE:	AS SHOWN
DWG. REF. NO.:	GSK SP PLAN VIEW

GREENSTREAK
3400 TREE CRT. IND. BLVD., ST. LOUIS, MO 63122-6689
PH: 800-325-9504 (636-225-9400) FX: 636-225-2049
WEBSITE: www.greenstreak.com EMAIL: info@greenstreak.com

TITLE: GREENSTREAK SPEED PLATE™ - PLAN VIEW

REV