FILE: N:\Public\AutoCAD\AutoCAD D-Drawings\Greenstreak\Projects\

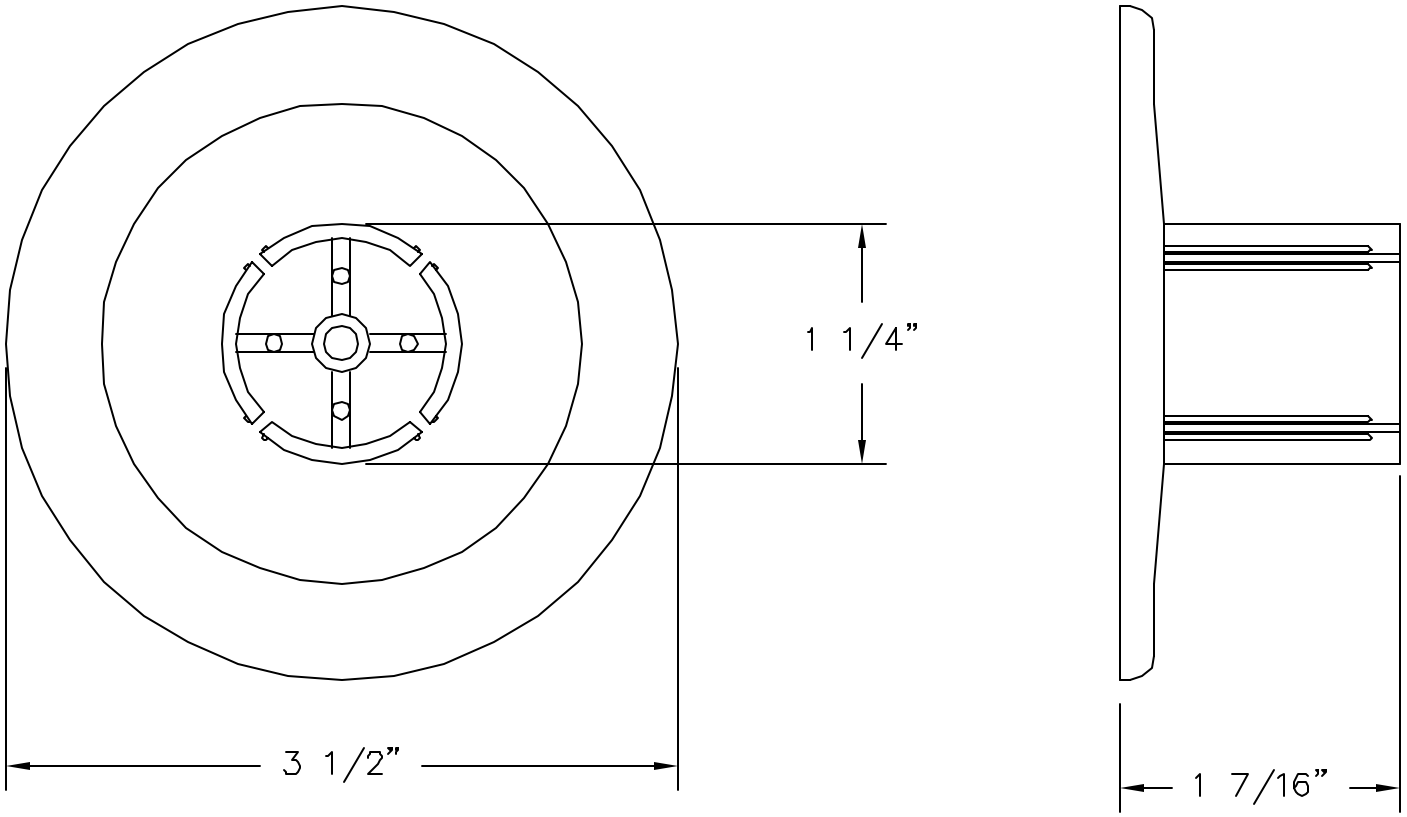

PSD/#9BX

SCALE: 6" = 1"

REV. MARK	REVISION	BY	CHK	APP	DATE

DESIGNED:		DATE:	
DRAWN:		PART NUMBER:	PSD/#9BX
CHECKED:		QUANTITY REQUIRED:	
APPROVED:		SCALE:	AS SHOWN
FABL REP.:		DWG. REF. NO.:	PSD-#9BX
SHEET NUMBER:			

GREENSTREAK

3400 TREE CRT. IND. BLVD., ST. LOUIS, MO 63122-6689

PH: 800-325-9504 (636-225-9400) FX: 800-551-5145 (636-225-2049)

WEBSITE: www.greenstreak.com EMAIL: info@greenstreak.com

TITLE: PSD/#9BX

REV