FILE: N:\Public\AutoCAD\AutoCAD D-Drawings\Greenstreak\Projects\

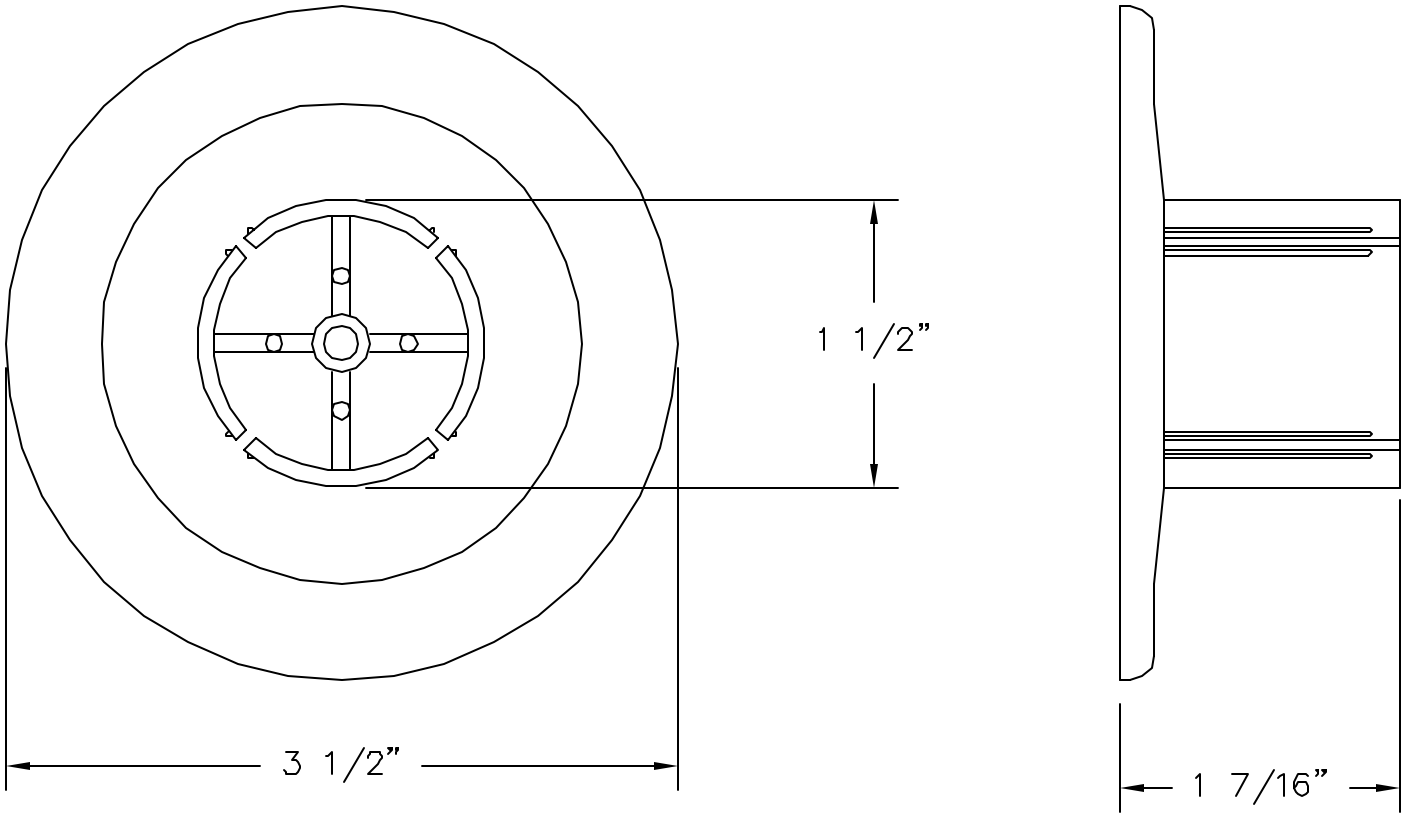

PSD/#11BX

SCALE: 6" = 1"

REV. MARK	REVISION	BY	CHK	APP	DATE

DESIGNED:	
DRAWN:	
CHECKED:	
APPROVED:	
FABL REP.:	
SHEET NUMBER:	

DATE:	
PART NUMBER:	PSD/#11BX
QUANTITY REQUIRED:	
SCALE:	AS SHOWN
DWG. REF. NO.:	PSD-#11BX

GREENSTREAK

3400 TREE CRT. IND. BLVD., ST. LOUIS, MO 63122-6689

PH: 800-325-9504 (636-225-9400) FX: 800-551-5145 (636-225-2049)

WEBSITE: www.greenstreak.com EMAIL: info@greenstreak.com

TITLE: PSD/#11BX

REV