FILE: N:\PUBLIC\AutoCAD\AutoCAD 0-Drawings\Greenstreak\Profiles\GSK656.dwg

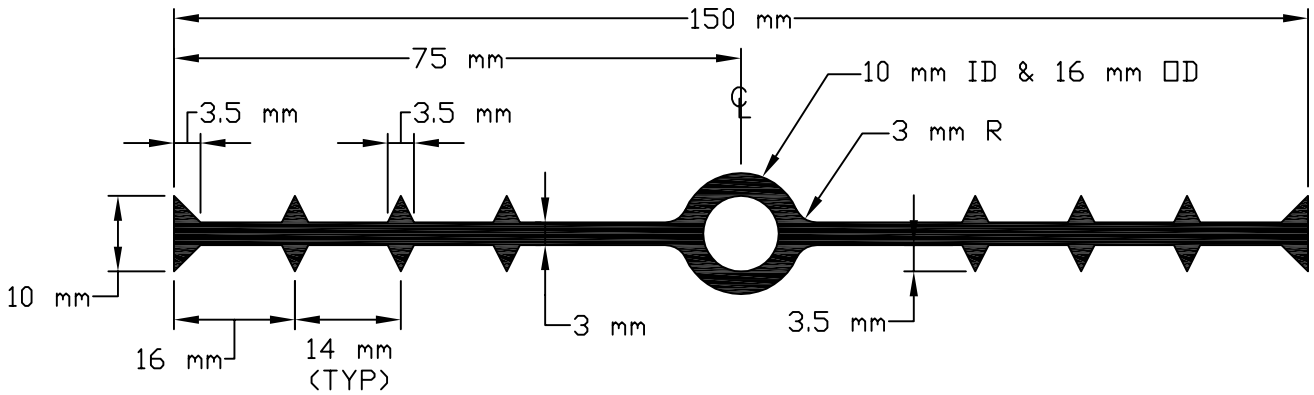

656 PROFILE

SCALE: 1" = 1"

REV. MARK	REVISION	BY	CHK	APP	DATE

DESIGNED:		
DRAWN:	C. DAHLGREN	9/20/05
CHECKED:		
APPROVED:		
FAB. REP.:		
SHEET NUMBER:		

DATE:	4/17/03 11:21 AM
PART NUMBER:	
QUANTITY REQUIRED:	
SCALE:	AS SHOWN
DWG. REF. NO.:	GSK656

GREENSTREAK

3400 TREE CRT. IND. BLVD., ST. LOUIS, MO 63122-6689

PH: 800-325-9504 (636-225-9400) FX: 800-551-5154 (636-225-4849)

WEBSITE: www.greenstreak.com EMAIL: info@greenstreak.com

TITLE: SIKA MEXICANA TYPE 0-15/3

REV