FILE: N:\PUBLIC\AutoCAD\AutoCAD 0-Drawings\Greenstreak\Profiles\GSK654.dwg

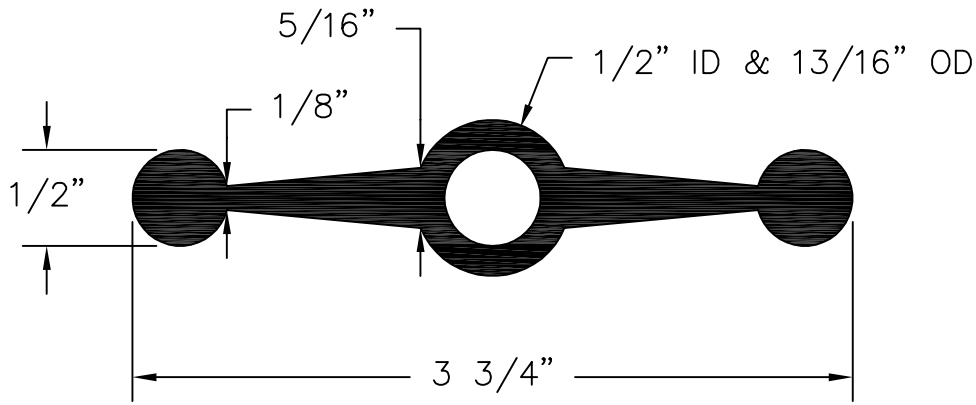

654 PROFILE

SCALE: 1" = 1"

REV. MARK	REVISION	BY	CHK	APP	DATE

DESIGNED:		
DRAWN:	R. MOSBEY	4/23/02
CHECKED:		
APPROVED:		
FAB. REP.:		
SHEET NUMBER:		

DATE:	
PART NUMBER:	
QUANTITY REQUIRED:	
SCALE:	AS SHOWN
DWG. REF. NO.:	GSK654

GREENSTREAK

3400 TREE CRT. IND. BLVD., ST. LOUIS, MO 63122-6689

PH: 800-325-9504 (636-225-9400) FX: 800-551-5145 (636-225-2049)

WEBSITE: www.greenstreak.com EMAIL: info@greenstreak.com

TITLE: 3 3/4" DUMBBELL WITH CENTERBULB

REV