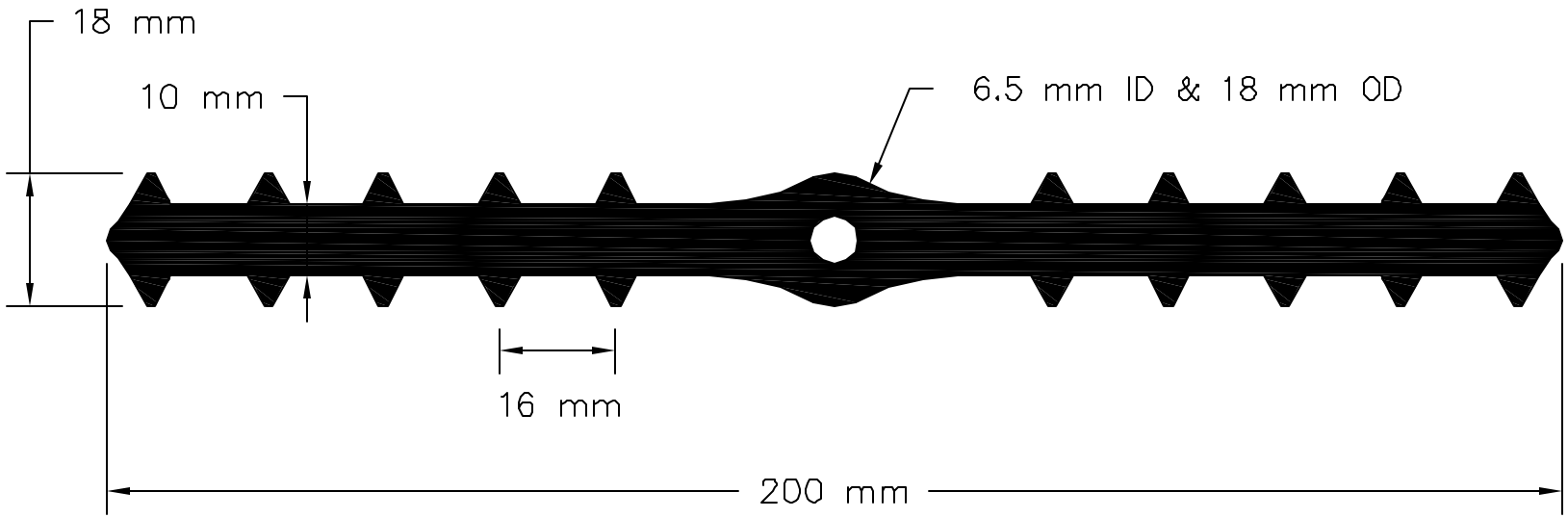

645 PROFILE

SCALE: 1:1

REV. MARK	REVISION	BY	CHK	APP	DATE

DESIGNED:		
DRAWN:	R. MOSBEY	4/19/02
CHECKED:		
APPROVED:		
FAB. REP.:		
SHEET NUMBER:		

DATE:	
PART NUMBER:	0645001
QUANTITY REQUIRED:	
SCALE:	AS NOTED
DWG. REF. NO.:	GSK645

GREENSTREAK
3400 TREE CRT. IND. BLVD., ST. LOUIS, MO 63122-6689
PH: 800-325-9504 (636-225-9400) FX: 800-551-5145 (636-225-2049)
WEBSITE: www.greenstreak.com EMAIL: info@greenstreak.com

TITLE: #645, 200 mm x 10 mm RIBBED WITH CENTERBULB

REV