FILE: N:\PUBLIC\AutoCAD\AutoCAD 0-Drawings\Greenstreak\Profiles\GSK632.DWG

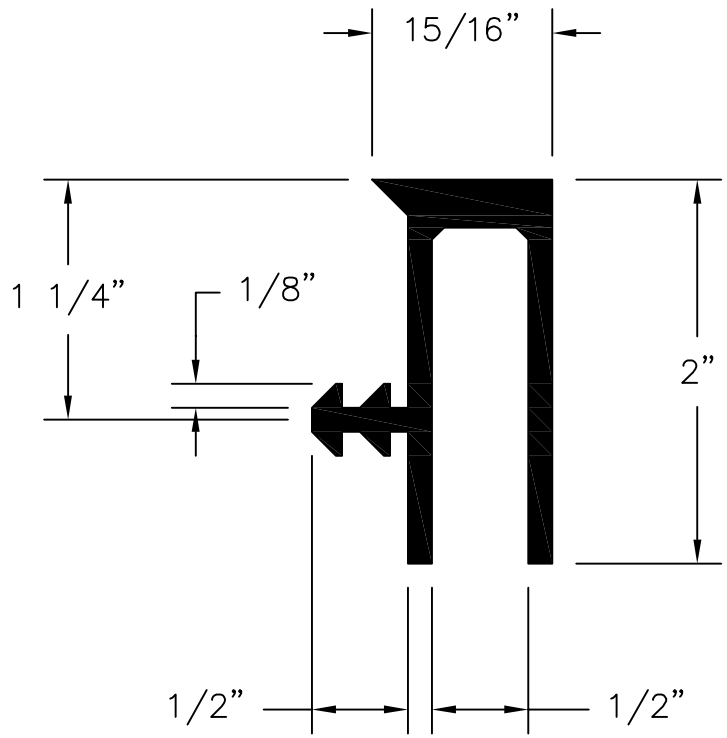

632 PROFILE

SCALE: 1" = 1"

REV. MARK	REVISION	BY	CHK	APP	DATE

DESIGNED:		DATE:	
DRAWN:	R. MOSBEY 5/29/01	PART NUMBER:	0632010
CHECKED:		QUANTITY REQUIRED:	
APPROVED:		SCALE:	AS SHOWN
FAB. REP.:		DWG. REF. NO.:	GSK632
SHEET NUMBER:			

GREENSTREAK

3400 TREE CRT. IND. BLVD., ST. LOUIS, MO 63122-6689

PH: 800-325-9504 (636-225-9400) FX: 800-551-5145 (636-225-4849)

WEBSITE: www.greenstreak.com EMAIL: info@greenstreak.com

TITLE: 632 – 2" X 1/2" RETROFIT PAVING CAP

REV