FILE: N:\PUBLIC\AutoCAD\AutoCAD 0-Drawings\Greenstreak\Profiles\GSK617.DWG

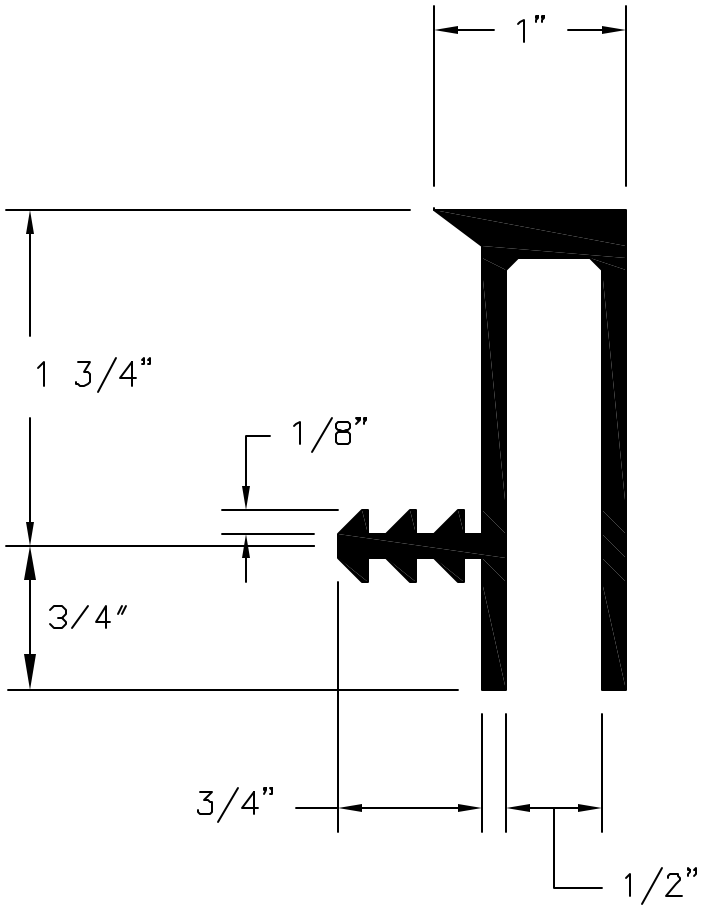

617 Profile

SCALE: 1" = 1"

0" 1" 2"

REV. MARK	REVISION	BY	CHK	APP	DATE

DESIGNED:		
DRAWN:	M.ESTES	2/20/03
CHECKED:		
APPROVED:		
FABL REP.:		
SHEET NUMBER:		

DATE:	
PART NUMBER:	0617010
QUANTITY REQUIRED:	
SCALE:	AS SHOWN
DWG. REF. NO.:	GSK617

GREENSTREAK

3400 TREE CRT. IND. BLVD., ST. LOUIS, MO 63122-6889

PH: 800-325-9504 (636-225-9400) FX: 800-551-5145 (636-225-2049)

WEBSITE: www.greenstreak.com EMAIL: info@greenstreak.com

TITLE: 617 - 2 1/2" X 1/2" RETROFIT G-SEAL PAVING CAP

REV