FILE: N:\PUBLIC\AutoCAD\AutoCAD 0-Drawings\Greenstreak\Profiles\GSK606.DWG

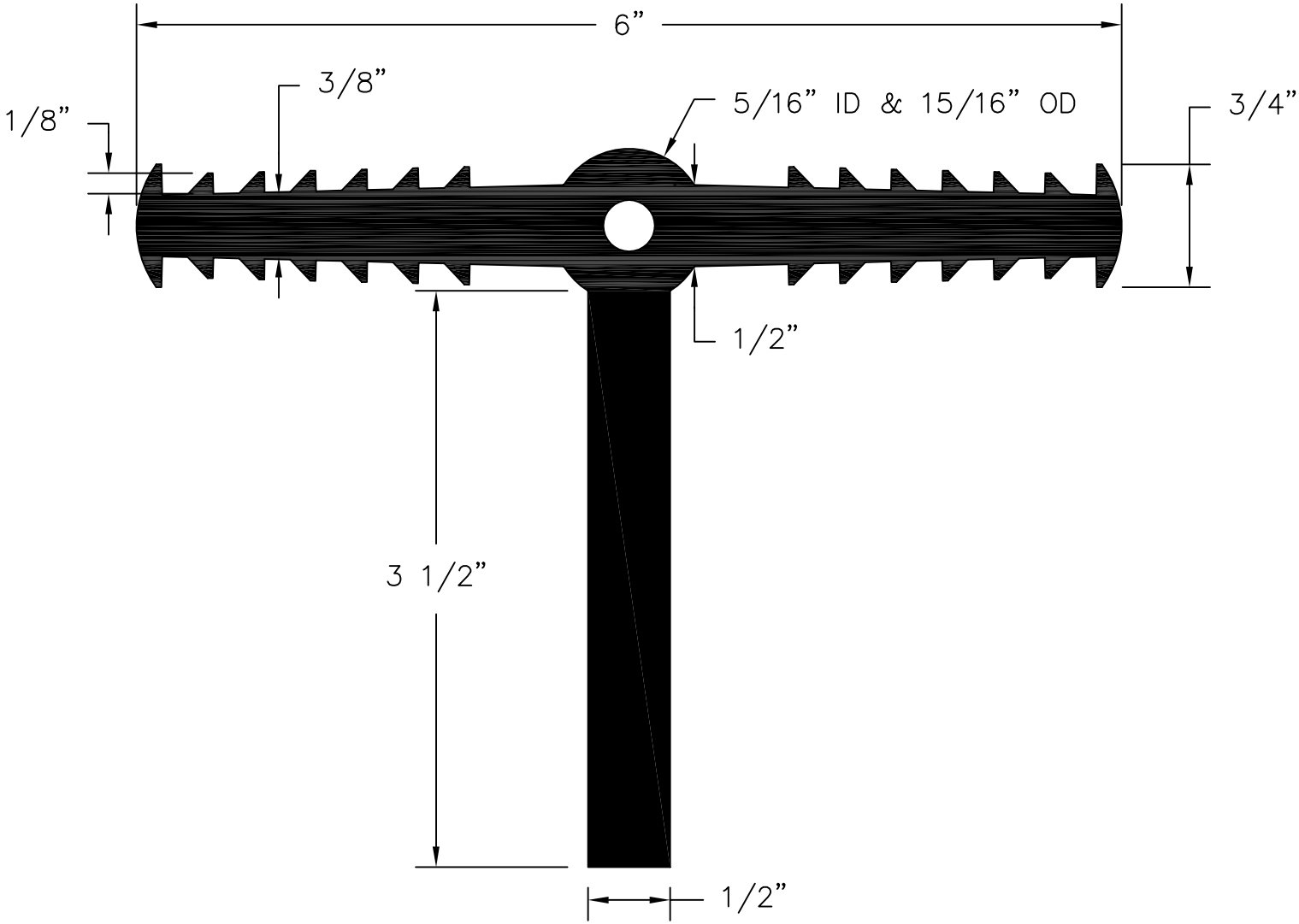

606 PROFILE

SCALE: 1" = 1"

0" 1" 2"

REV. MARK	REVISION	BY	CHK	APP	DATE

DESIGNED:		DATE:	
DRAWN:	R. MOSBEY 4/25/02	PART NUMBER:	0606009
CHECKED:		QUANTITY REQUIRED:	
APPROVED:		SCALE:	AS SHOWN
FAB. REP.:		DWG. REF. NO.:	GSK606
SHEET NUMBER:			

GREENSTREAK

3400 TREE CRT. IND. BLVD., ST. LOUIS, MO 63122-6689

PH: 800-325-9504 (636-225-9400) FX: 800-551-5145 (636-225-2049)

WEBSITE: www.greenstreak.com EMAIL: info@greenstreak.com

TITLE: 6" RIBBED SPECIAL

REV