FILE: N:\PUBLIC\AutoCAD\AutoCAD 0-Drawings\Greenstreak\Profiles\GSK581.DWG

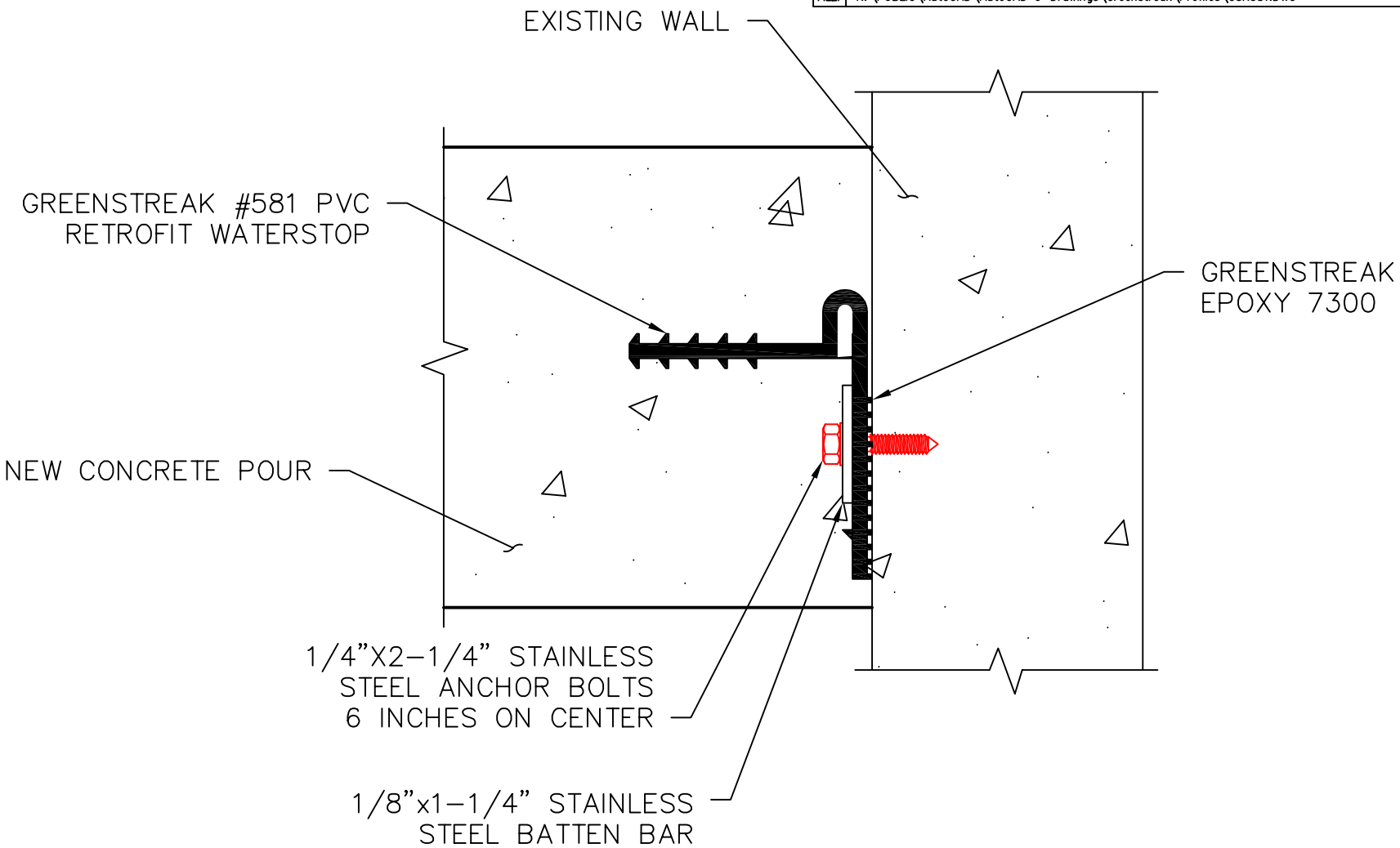

INSTALL. DETAIL –

SCALE: NOT TO SCALE

REV. MARK	REVISION	BY	CHK	APP	DATE

DESIGNED:		
DRAWN:	K. LOYD	10/24/07
CHECKED:		
APPROVED:		
FAB. REP.:		
SHEET NUMBER:		

DATE:	11/11/02 3:48 PM
PART NUMBER:	0581010
QUANTITY REQUIRED:	
SCALE:	AS SHOWN
DWG. REF. NO.:	GSK581

GREENSTREAK

3400 TREE CRT. IND. BLVD., ST. LOUIS, MO 63122-6689

PH: 800-325-9504 (636-225-9400) FX: 800-551-5154 (636-225-4849)

WEBSITE: www.greenstreak.com EMAIL: info@greenstreak.com

TITLE: #581 CONSTRUCTION JOINT INSTALLATION DETAIL

REV