FILE: N:\Public\AutoCAD\AutoCAD 0-Drawings\Greenstreak\Profiles\Web Profiles\PVC Waterstop\GSK581web.dwg

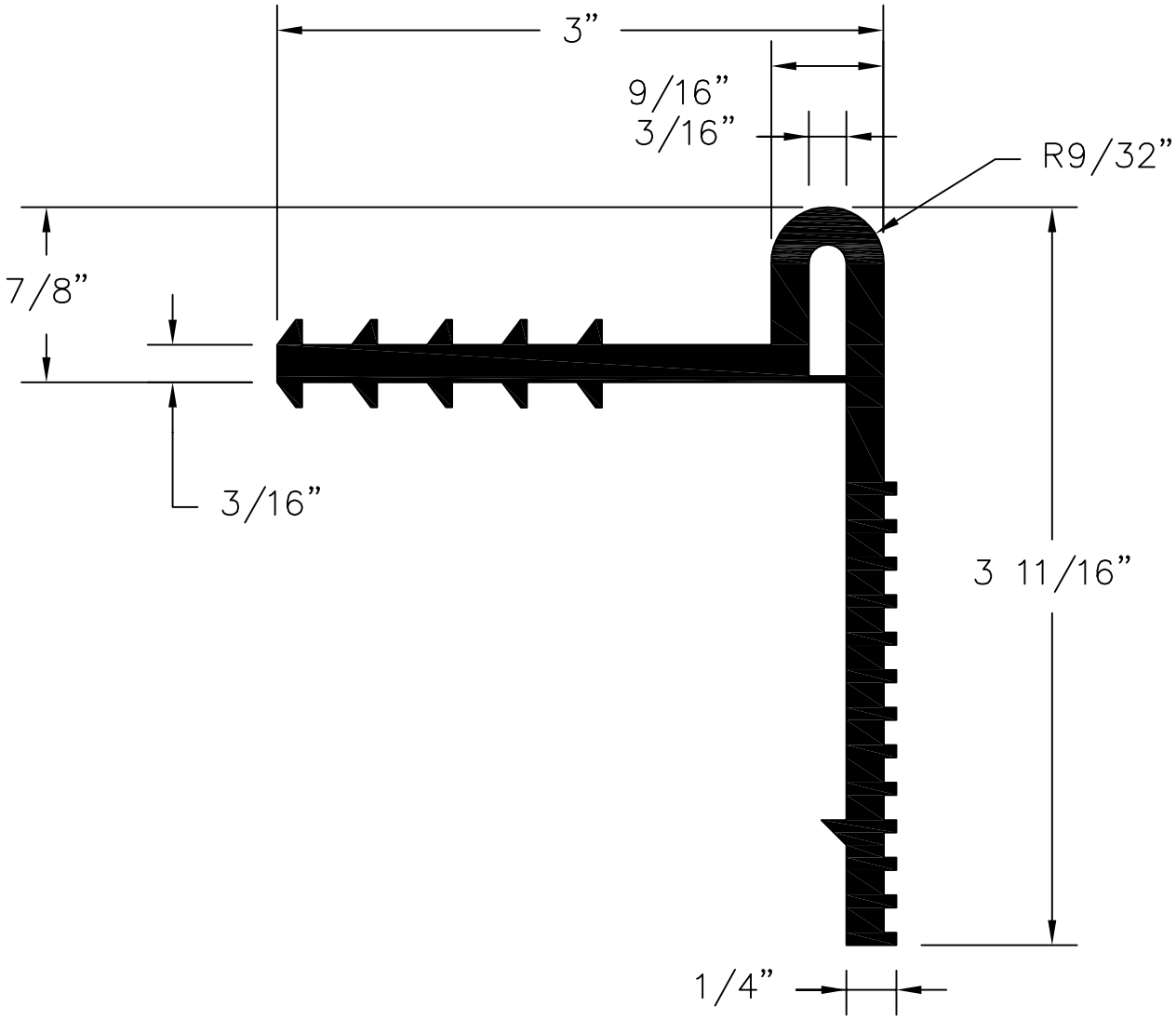

581 PROFILE

SCALE: 1" = 1"

0" 1" 2"

REV. MARK	REVISION	BY	CHK	APP	DATE

DESIGNED:		DATE:	
DRAWN: CMD	11/9/07	PART NUMBER: 0581010	
CHECKED:		QUANTITY REQUIRED:	
APPROVED:		SCALE: AS SHOWN	
FAB. REP.:		DWG. REF. NO.: GSK581	
SHEET NUMBER:			

GREENSTREAK

3400 TREE CRT. IND. BLVD., ST. LOUIS, MO 63122-6689

PH: 800-325-9504 (636-225-9400) FX: 800-551-5154 (636-225-4849)

WEBSITE: www.greenstreak.com EMAIL: info@greenstreak.com

TITLE: RETROFIT TEAR WEB

REV