FILE: N:\PUBLIC\AutoCAD\AutoCAD 0-Drawings\Greenstreak\Profiles\GSK575.dwg

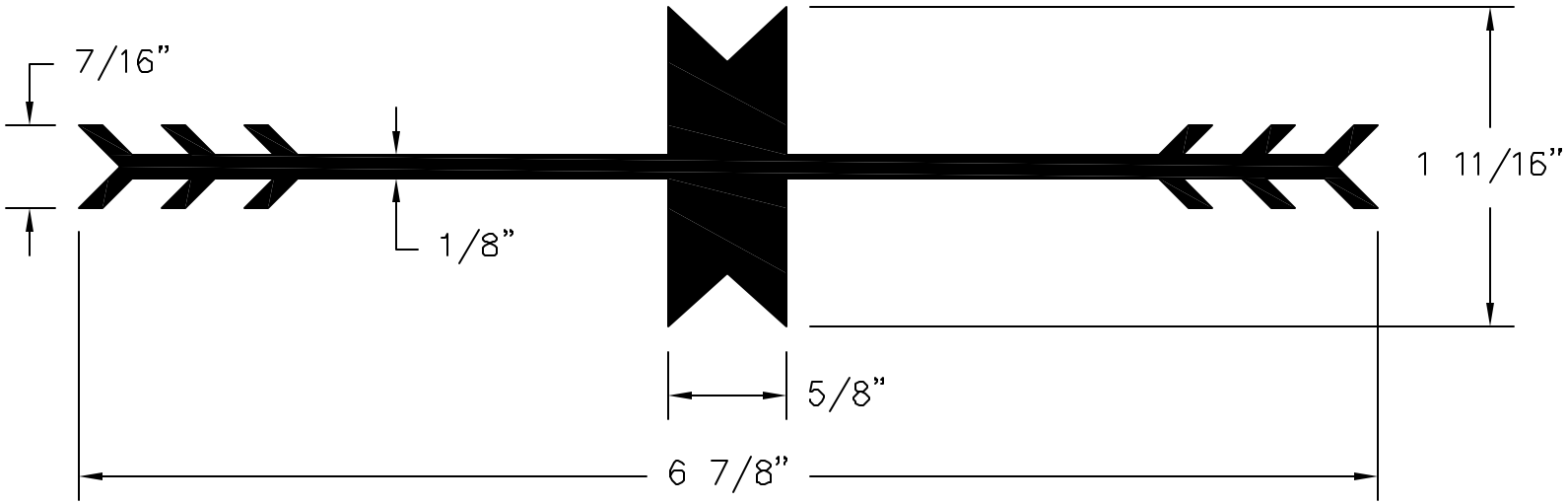

575 PROFILE

SCALE: 1" = 1"

0" 1" 2"

REV. MARK	REVISION	BY	CHK	APP	DATE

DESIGNED:		
DRAWN:	C. DAHLGREN	1/3/06
CHECKED:		
APPROVED:		
FABL REP.:		
SHEET NUMBER:		

DATE:	
PART NUMBER:	
QUANTITY REQUIRED:	
SCALE:	AS SHOWN
DWG. REF. NO.:	GSK575

GREENSTREAK

3400 TREE CRT. IND. BLVD., ST. LOUIS, MO 63122-6689

PH: 800-325-9504 (636-225-9400) FX: 800-551-5145 (636-225-2049)

WEBSITE: www.greenstreak.com EMAIL: info@greenstreak.com

TITLE: #575 – MASONRY CONTROL JOINT

REV