FILE: N:\PUBLIC\AutoCAD\AutoCAD 0-Drawings\Greenstreak\Form Liner\GSK334.dwg

☒ UNI-CAST
☒ MULTI-CAST
☐ DURA-CAST
☒ ULTRA-CAST

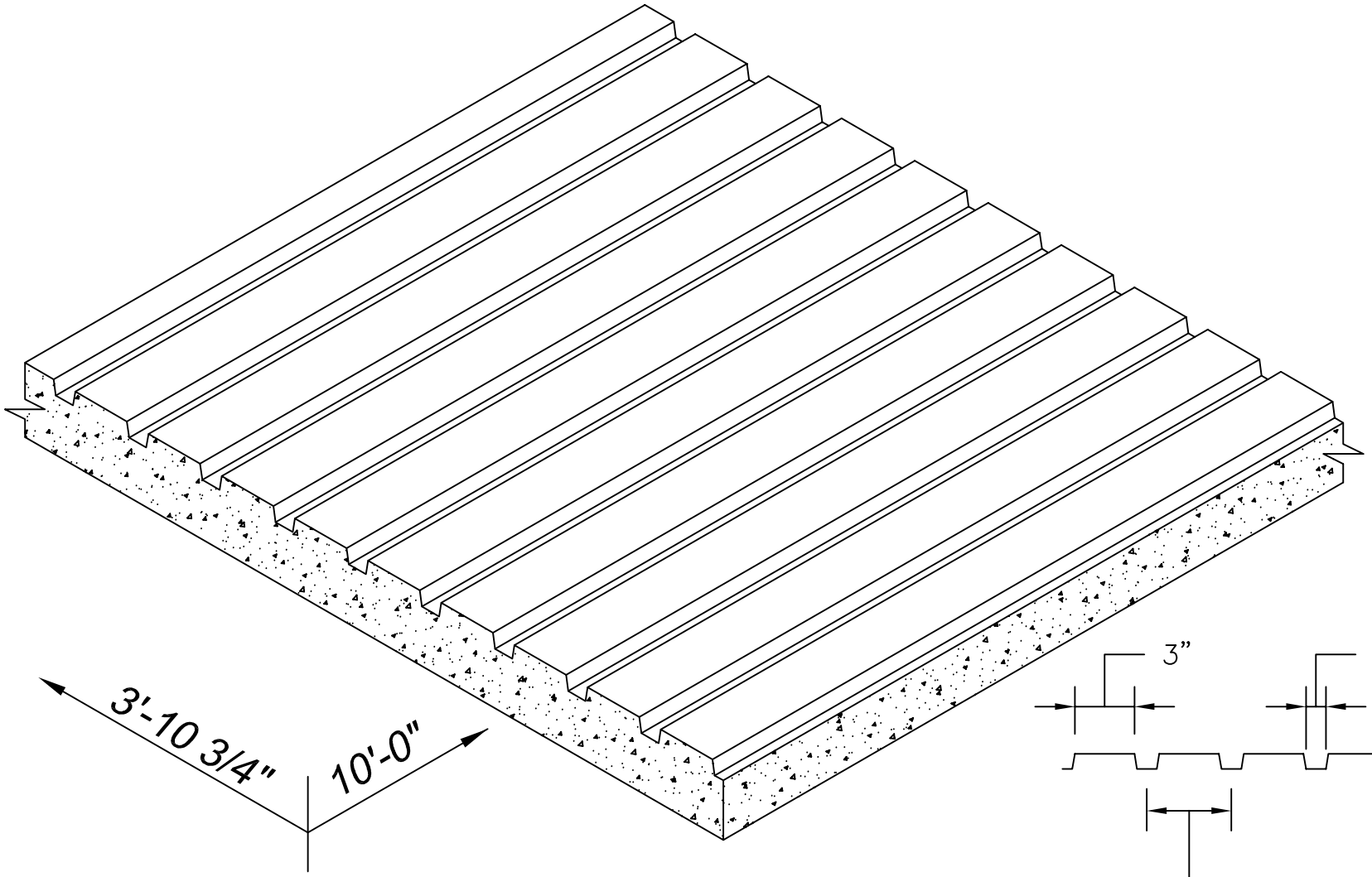

ISOMETRIC VIEW

SCALE: NOT TO SCALE

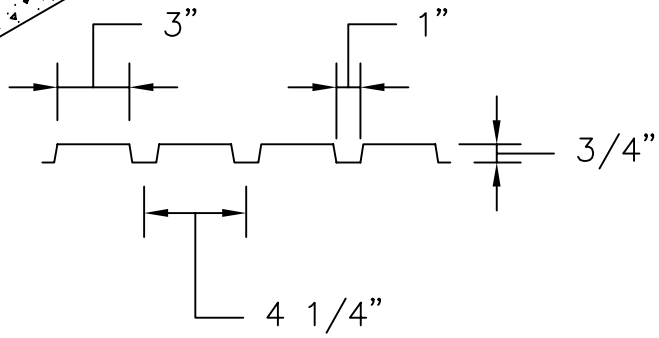

SECTION VIEW

SCALE: 1-1/2" = 1'-0"

REV. MARK	REVISION	BY	CHK	APP	DATE

DESIGNED:		DATE:	
DRAWN:		PART NUMBER:	
CHECKED:		QUANTITY REQUIRED:	
APPROVED:		SCALE:	AS SHOWN
MFG. REP.:		DWG. REF. NO.:	GSK334
SHEET NUMBER:			

GREENSTREAK

3400 TREE CRT. IND. BLVD., ST. LOUIS, MO 63122-6689

PH: 800-325-9504 (636-225-9400) FX: 800-551-5145 (636-225-2049)

WEBSITE: www.greenstreak.com EMAIL: info@greenstreak.com

TITLE: #334 TRAPEZOIDAL RIB

REV