FILE: N:\Group Folders\Engineering\AutoCAD\AutoCAD DWGS\GSK\Form Liner\Details\GSK329.dwg

☒ UNI–CAST
☒ MULTI–CAST
☐ DURA–CAST
☒ ULTRA–CAST

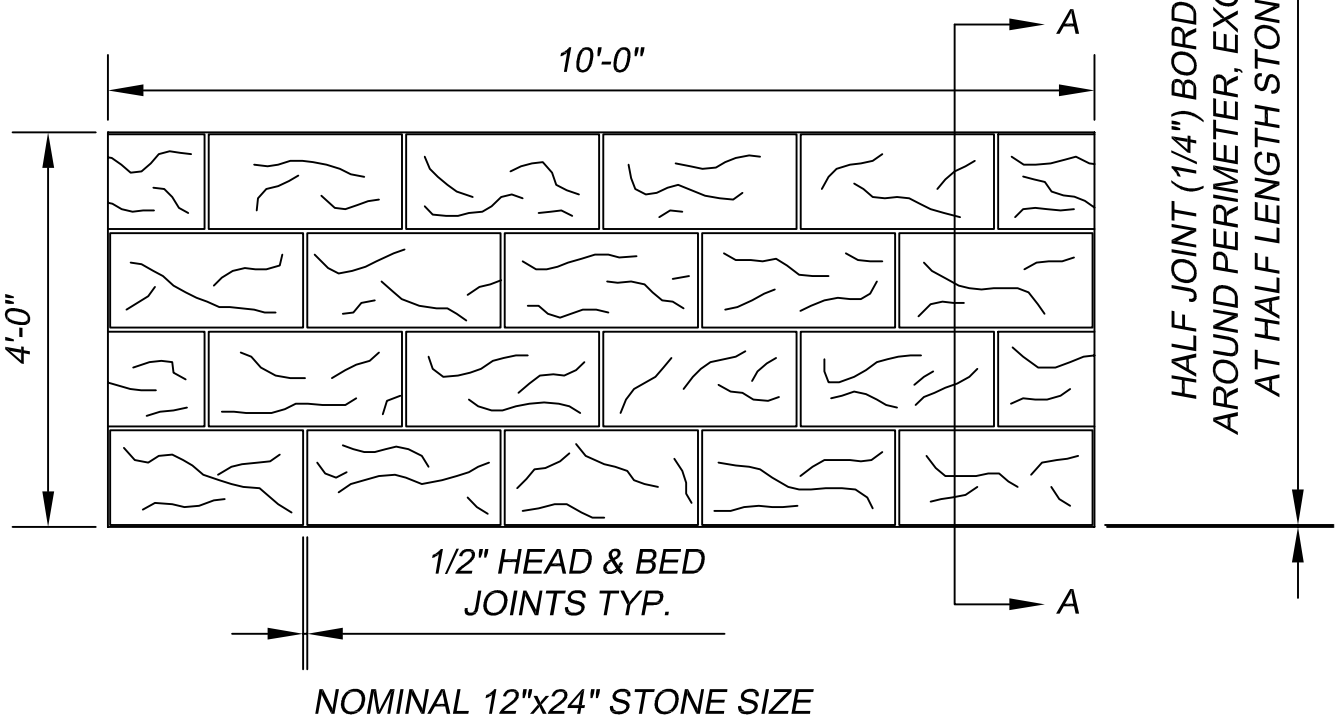

ELEVATION VIEW –
SCALE: 1/2" = 1'–0"

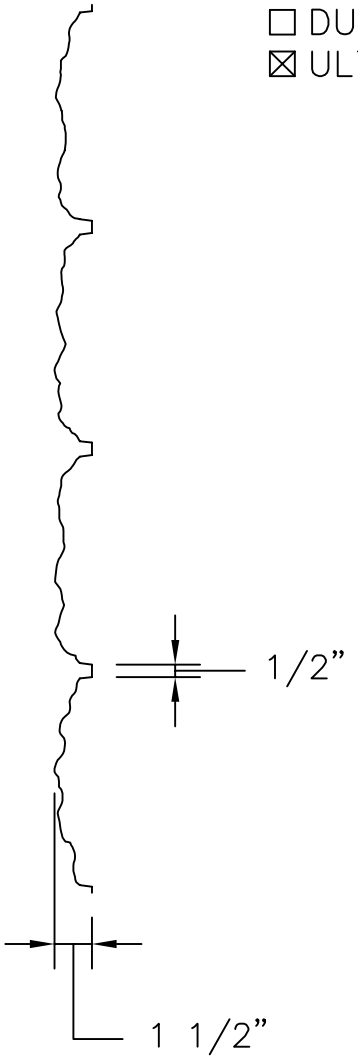

SECTION VIEW –
SCALE: 1–1/2" = 1'–0"

REV. MARK	REVISION	BY	CHK	APP	DATE

DESIGNED:		DATE:	
DRAWN:		PART NUMBER:	
CHECKED:		QUANTITY REQUIRED:	
APPROVED:		SCALE:	AS SHOWN
MFG. REP.:		DWG. REF. NO.:	GSK329
SHEET NUMBER:			

GREENSTREAK
3400 TREE CRT. IND. BLVD., ST. LOUIS, MO 63122–6689
PH: 800–325–9504 (636–225–9400) FX: 800–551–5145 (636–225–2049)
WEBSITE: www.greenstreak.com EMAIL: info@greenstreak.com

TITLE: #329 12"x24" RUNNING BOND ASHLAR STONE

REV