FILE: N:\Public\AutoCAD\AutoCAD 0-Drawings\Greenstreak\Profiles\GSK322.dwg

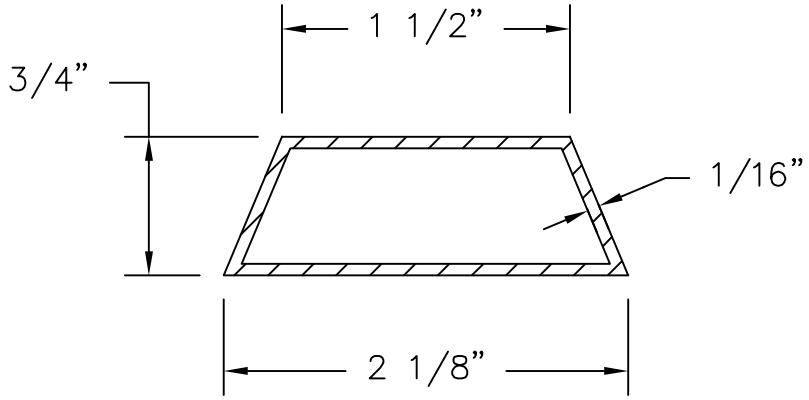

#322 SECTION VIEW

SCALE: 1" = 1"

REV. MARK	REVISION	BY	CHK	APP	DATE

DESIGNED:		DATE:	
DRAWN: JMV	3-17-04	PART NUMBER: 0322001	
CHECKED:		QUANTITY REQUIRED:	
APPROVED:		SCALE: AS SHOWN	
FAB. REP.:		DWG. REF. NO.: GSK322	
SHEET NUMBER:			

GREENSTREAK

3400 TREE CRT. IND. BLVD., ST. LOUIS, MO 63122-6689

PH: 800-325-9504 (636-225-9400) FX: 800-551-5145 (636-225-4849)

WEBSITE: www.greenstreak.com EMAIL: info@greenstreak.com

TITLE: #322 RUSTICATION STRIP

REV